arteche

smART P500R

PROTECTION RELAYS.

This document may be subject to changes.
Contact ARTECHE to confirm the characteristics and availability of the products described here.

Moving together

CONTENTS

1. DESCRIPTION

The smART P500R series devices are Multifunction Protection Relays with Digital Technology, which make it possible to carry out protection, control, metering and communication functions in electrical systems, particularly in Distribution. They can be used as stand-alone equipment or integrated within a system.

There are multiple possibilities for their configuration and data browsing, event recorders, faults, and oscillographic analysis that are supported by the proART® configuration and communication software.

The smART P500R Protection Relay family consists of different models that allows for the protection, measurement, and management of a large number of applications, both for electrical networks and power distribution substations.

The following models are available: recloser control, feeder protection, and transformer backup, capacitator bank protections and backup for sub-transmission lines.

2. EASY CONFIGURATION

The proART® software, developed using the Visual Studio.net platform, allows for the configuration and survey of any equipment within the smART P500R relay family in a very simple and fast manner, which facilitates its field setup.

3. COMMUNICATIONS IN SMART GRID NETWORKS

The smART P500R series of relays is designed to facilitate its integration into SmartGrid networks.

They have a large variety of communication protocols which can be chosen by the user with the keyboard or the proART® software in its different ports:

- Front Port: ArtCom®, DNP 3.0 Level 2 slave proprietary port, MODBUS RTU, Harris 5000, IEC 60870-5-101, and PROCOME.
- Rear ports (2): ArtCom®, DNP 3.0 Level 2 slave proprietary port, MODBUS RTU, Harris 5000, IEC 60870-5-101, PROCOME and Smart P2P (Peer to Peer).
- Ethernet Port: ArtCom® Proprietary port, DNP 3.0 TCP/IP and UDP/IP, MODBUS TCP/IP, IEC 60870-6-5-104.

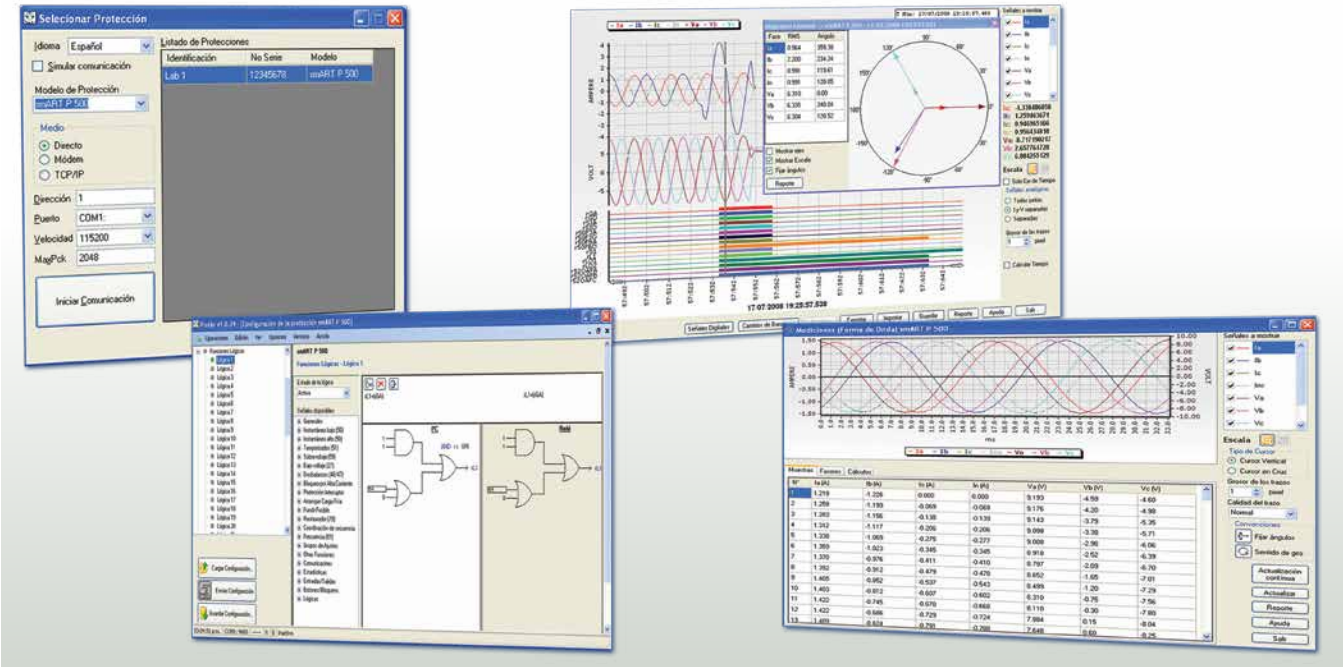

4. smART P500R RELAY FEATURES

PROTECTION & AUTOMATIC FUNCTIONS

- Phase timed overcurrent (51).
- Phase timed neutral overcurrent (51N).
- Residual timed overcurrent (51G).
- Phase instantaneous overcurrent (50).
- Neutral instantaneous overcurrent (50G).
- Residual instantaneous overcurrent (50N).
- Instantaneous sensitive neutral overcurrent (50GS).
- Instantaneous sensitive neutral overcurrent (51GS).
- Directional of the phase overcurrent functions (3X67).
- Directional of the neutral overcurrent functions (3x67N)
- Directional of the sensitive neutral overcurrent functions (3x67GS).
- Open phase (46OP).
- Negative sequence overcurrent for a defined time and inverse time (46 DT/46IDMT).
- Circuit breaker faiture (50BF).

STANDARD FEATURES

- 6 Setting groups.
- Circuit breaker supervision (74TC/CC).
- External battery supervision.
- Self-diagnosis and internal temperature supervision.
- 4 Digital outputs and 3 digital inputs.
- 1 front RS-232 port, 1 rear RS-232 port and 1 RS-485 port.
- Current Imbalance between star-connected banks (61).
- Voltage unbalance protection (3x47).
- Undervoltage, 4 levels (27).
- Overvoltage, 4 levels (59).
- Neutral overvoltage (59N).
- Overvoltage due to unbalance in capacitator banks (59NC).
- Underfrequency (81m), overfrequency (81M), and frequency derived according to the time (81D).
- Synchronism check (25).
- Directional power protection (32).
- Automatic reclosing with tripolar or monopolar action (79).
- High current lockout phase or neutral.
- Fuse Loss (60FL).
- Cold load pickup.
- Fault location.
- Sectionalizer mode.
- Network Reconfiguration Automatism.

OPTIONAL FEATURES

- SMS Communication and control via SMS messages with an external GSM Modem.
- Ethernet Port (RJ45) that includes 4 digital outputs/9 digital inputs.
- 8 Digital inputs and 7 digital outputs module.
- Bluetooth Port and USB (replaces the front RS-232).

› smART P500R in cubicles.

5. USER INTERFACE

All smART P500R relays include:

- 4X20 LCD display with adjustable contrast.
- 3 Communication ports.
- Optional Ethernet.
- IRIG-B hourly synchronization.
- Programmable function keys.
- 12 Configurable LEDs.
- proART® software.

6. RECORDING AND MEASUREMENT OF PARAMETERS

The smART P500R relays allow for the recording and measurement of the following parameters:

- Instantaneous values of currents of the three phases, neutral and sensitive neutral.
- Instantaneous values for phase and line voltages.
- Auxiliary voltage and voltage of the battery.
- Active, reactive, apparent power, by phases and three-phase.
- Active energy received and delivered.
- Reactive power in the four quadrants.
- Power factor by phases and three-phase.
- Phase frequency and sequence.
- Demands of currents, voltages, power factor and active, reactive and apparent power by phase and three-phase.
- Sequence components in voltage and current signals.
- Harmonic components, THD, phasors, distortion factor of the currents and voltages by phase.
- Power quality (PQ) events: sags, swells, voltage and current unbalances, losses of phase and supply voltage; variations in frequency and parameters of the CBEMA curve.
- Reliability indices (advanced model):
  - System average interruption frequency index (SAIFI).
  - System average interruption duration index (SAIDI).
  - Momentary average interruption frequency index (MAIFI).
  - Customer average interruption frequency index (CAIFI) affected only once.
  - Customer average interruption duration index (CAIDI).
  - Average service availability index (ASAI).
- Unit temperature.
- Statistical data relative to circuit breaker.
- Measurement record.

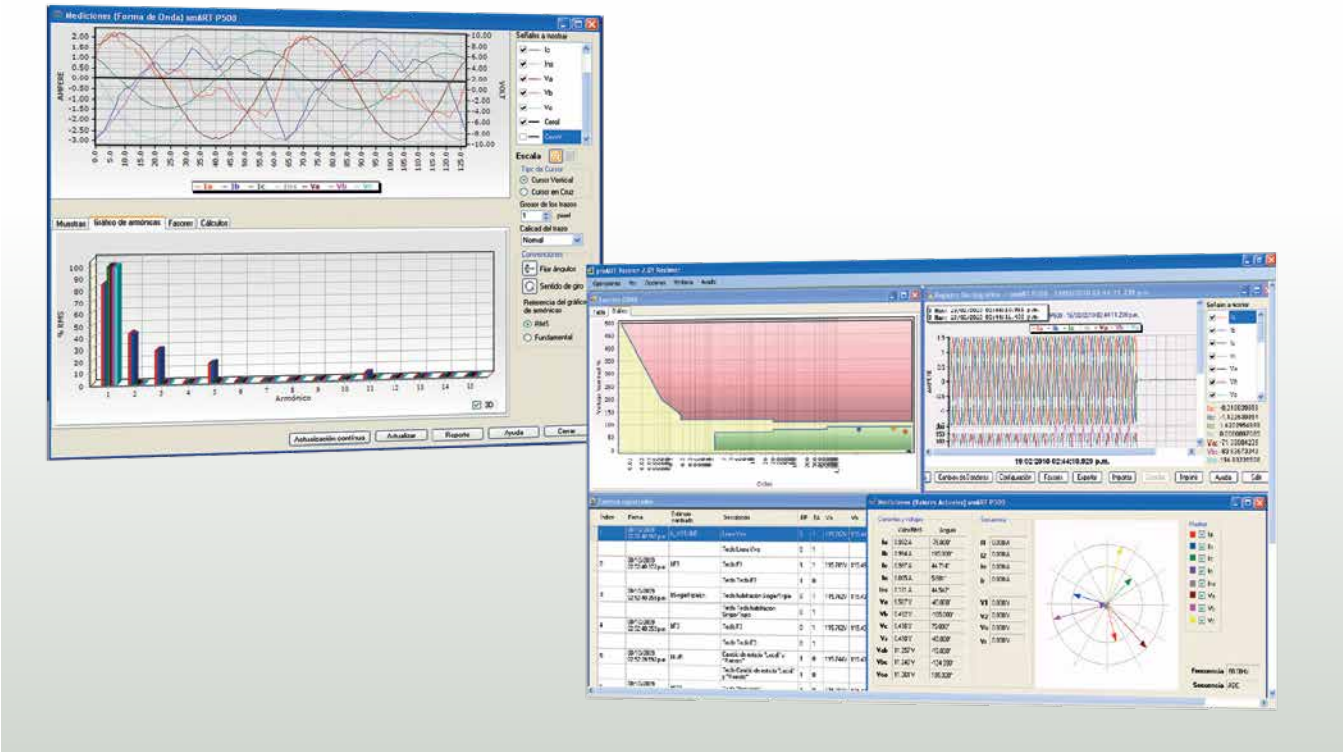

7. LOAD PROFILE

With the smART P500R relay, up to 25 parameters (which can be selected by the user) can be stored in non-volatile memory, within the groups of instantaneous values or energy accumulators, in time intervals of between 1 and 60 minutes, with 1 minute steps. A total of 3,000 records can be stored.

8. OSCILLOGRAPHIC REGISTERS

smART P500R protection relays allow:

- Recording and storing without filtering of the waveforms of instant voltage and current values associated with the faults or with triggers selected by the user.
- Oscillographic registers: the number of samples per cycle can be programmed: (16, 32, 64, 128), number of cycles to store (1 to 3.000; 1 to 2.000; 1 to 1.000; 1 to 500) and number of pre-fault cycles (1 to 20).
- Various examples of possible combinations are shown in the following table:

Samples/cycle	Number of cycles to store	Maximum number of registers
16	3.000	10
16	20	200
32	2.000	7
32	20	180
64	1.000	7
64	20	140
128	500	7
128	20	100

9. FAULT REPORT

The smART P500R protections make it possible to record the last 32 faults with the following information:

- Start, trip, extinction and duration of the fault.
- Values of the current and voltage signals of each phase, neutral and sensitive neutral, during the pre-fault, trip and their value limits (maximum or minimum as applicable).
- Cause of the trip.
- Protection units that were activated.
- Active group.
- Directionality of the fault.

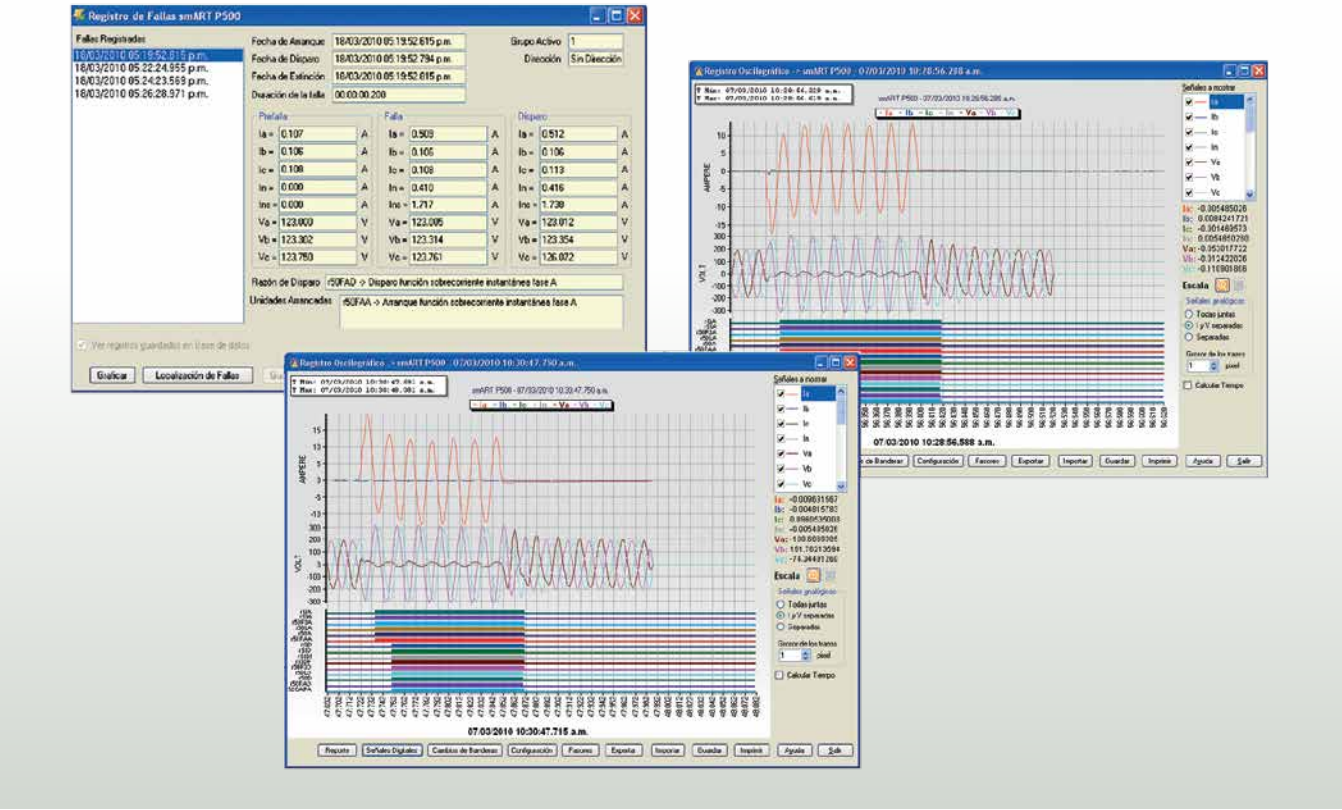

10. EVENT RECORD

With the smART P500R protection relay up to 3.500 events related to the protection operation can be recorded and stored: programming changes, digital input and output statuses, pickup and/or trip of protection functions, automations, statistics, etc.

RMS values for voltage and current signals associated with each event are stored in each event. The user can limit the events that are stored by deactivating those which are considered less important.

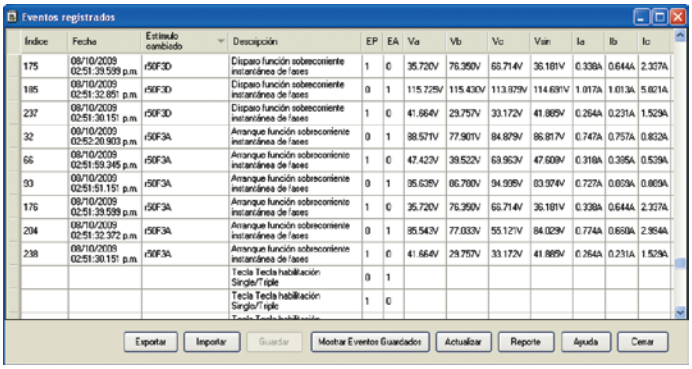

Índice	Fecha	Estímulo cambiado	Descripción	EP	EA	Va	Vb	Vc	Vsin	Ia	Ib	Ic
175	08/10/2009 02:51:39.599 p.m.	r50F3D	Disparo función sobrecorriente instantánea de fases	1	0	35.720V	76.350V	66.714V	36.181V	0.338A	0.644A	2.337A
185	08/10/2009 02:51:32.851 p.m.	r50F3D	Disparo función sobrecorriente instantánea de fases	0	1	115.725V	115.430V	113.879V	114.691V	1.017A	1.013A	5.621A
237	08/10/2009 02:51:30.151 p.m.	r50F3D	Disparo función sobrecorriente instantánea de fases	1	0	41.664V	29.757V	33.172V	41.885V	0.264A	0.231A	1.529A
32	08/10/2009 02:52:20.903 p.m.	r50F3A	Arranque función sobrecorriente instantánea de fases	0	1	88.571V	77.901V	84.879V	86.817V	0.747A	0.757A	0.832A
66	08/10/2009 02:51:59.345 p.m.	r50F3A	Arranque función sobrecorriente instantánea de fases	1	0	47.423V	39.522V	63.963V	47.608V	0.318A	0.395A	0.539A
93	08/10/2009 02:51:51.151 p.m.	r50F3A	Arranque función sobrecorriente instantánea de fases	0	1	85.635V	86.780V	94.935V	83.974V	0.727A	0.863A	0.869A
176	08/10/2009 02:51:39.599 p.m.	r50F3A	Arranque función sobrecorriente instantánea de fases	1	0	35.720V	76.350V	66.714V	36.181V	0.338A	0.644A	2.337A
204	08/10/2009 02:51:32.372 p.m.	r50F3A	Arranque función sobrecorriente instantánea de fases	0	1	85.543V	77.033V	55.121V	84.029V	0.774A	0.658A	2.954A
238	08/10/2009 02:51:30.151 p.m.	r50F3A	Arranque función sobrecorriente instantánea de fases	1	0	41.664V	29.757V	33.172V	41.885V	0.264A	0.231A	1.529A
			Tecla Tecla habilitación Single/Triple	0	1							
			Tecla Tecla habilitación Single/Triple	1	0							

11. SELF-DIAGNOSTIC

The relay has various self-diagnostic routines that make it possible to detect possible hardware failures. In addition, the relay monitors the equipment's internal temperature with the possibility of an alarm.

It also has a type of test, which checks the operation of the LEDs, outputs, inputs, display and keyboard.

12. AUTOMATION CAPACITY

The smART P500R protection relay incorporates advanced automated functions including 40 user-programmable logic functions, communication capacities, and integration in SCADA systems.

Within these capabilities, the following is emphasized:

- It has teleprotection functions through the use of the smART P2P protocol that allows for the exchange of information in a fast, safe, and optimized manner, making the compliance of directional comparison (DCB, DCUB, PUTT and POTT) and direct transfer trip (DTT) schemes possible.
- Teleprotection compares the local and remote status to allow or block trips in addition to any other application of interest, such as for example load control, etc.
- Automatic schemes for the reconfiguration of ring-distribution networks can be created out through the use of algorithms whose objective is to clear a fault in an electrical system and reconfigure it in such a way that the number of services affected is reduced to the minimum. The algorithms operate locally, are automatic and do not need any operator involvement in order to achieve their goal.
- Self-diagnostic functions and test routines to inform and ensure optimal functioning of the equipment at all times, parameters supervised are internal battery voltage, auxiliary voltage as well as hardware status (Flash memory, SDRAM, SRAM, FPGA, A/D).
- Test mode that allows verification of LED status, digital inputs and outputs, front keyboard and screen.
- Protection can be controlled via mobile phone, using the short message service (SMS) which provides the equipment with a broad, safe, and controlled level of accessibility.
- Up to 40 uses programmable logic functions, making this application field broader.
- Has LEDs, physical buttons and programmable digital inputs and outputs, offering a wide variety of options to satisfy any desired application.
- The protection has 8 push buttons and an LCD screen that provides programming and operating information.

13. CONNECTION DIAGRAMS AND MODELS

smART P500R-AL

State-of-the-art protection, control and measurement terminal for the state-of-the-art protection, control and metering terminal for the primary protection and back-up of medium-voltage lines.

Technology and reliability in distribution networks.

AVAILABLE PROTECTION FUNCTIONS:

- Phase and neutral low instantaneous overcurrent (50/50N).
- Phase and neutral high instantaneous overcurrent (50/50N).
- Timed phase and neutral overcurrent (51/51N).
- Negative sequence (46IDMT(46DT).
- Open phase (46FA).
- Undervoltage (27).
- Overvoltage (59).
- Voltage unbalance (47).
- Neutral overvoltage (59N)(64)).
- Reclosing (79).
- Cold load pickup.
- Circuit breaker failure (50BF).
- Circuit breaker monitoring (74TC/CC).

ADVANCED MODEL FUNCTIONS (ADDITIONAL):

- Directionality (67/67N/67NS).
- Frequency (81).
- Synchronism (25).
- Fuse loss (60FL).
- Directional Power (32F/R).
- Fault Locator.

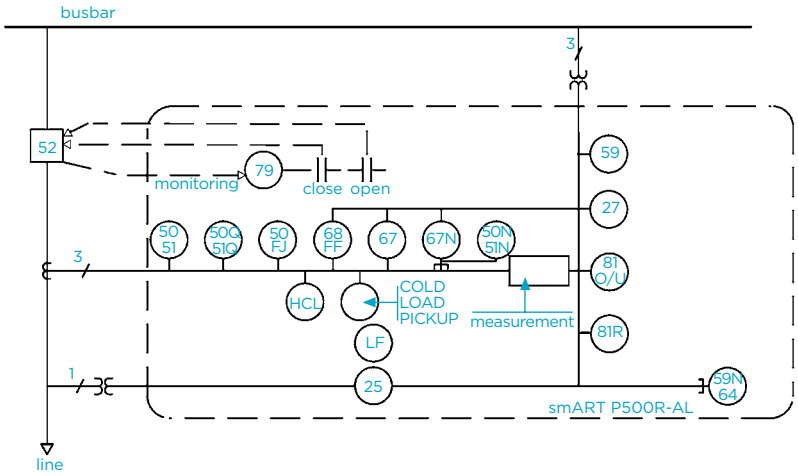

smART P500R-BC

End-to-end solution for protecting and controlling capacitor banks. In addition to typical protection functions for these elements, the unit supervises the bank in real time and includes connection and disconnection automations for achieving the optimum power factor in the network.

Precision and flexibility for accurate regulation and increase of power quality.

FUNCTIONS:

- Phase and neutral low instantaneous overcurrent (50/50N).
- Phase and neutral high instantaneous overcurrent (50/50N).
- Timed phase and neutral overcurrent (51/51N).
- Open phase (46FA).
- Current Imbalance between star-connected banks (61).
- Undervoltage (27).
- Overvoltage (59).
- Overvoltage due to a voltage unbalance (59NC).
- Voltage imbalance (47).
- Cold load pickup.
- Circuit breaker failure (50BF).
- Circuit breaker monitoring (74TC/CC).
- Automatism of automatic connection and disconnection of individual banks.

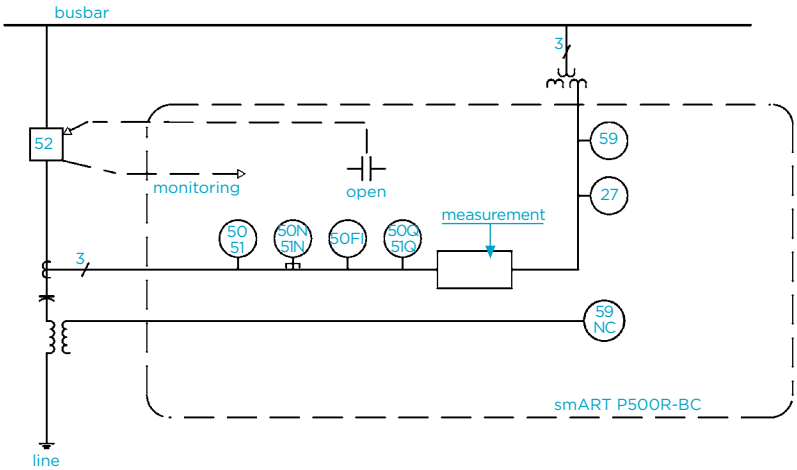

smART P500R-RC

Recloser control device, which is the result of the ARTECHE Group's experience in the design and manufacture of distribution network equipment. In addition to the traditional functions used to control this equipment, this device offers advanced protection and high-precision measurement functions.

Sturdy and safe for network automation.

AVAILABLE PROTECTION FUNCTIONS:

- Phase and neutral low instantaneous overcurrent (50/50N).
- Phase and neutral high instantaneous overcurrent (50/50N).
- Timed phase and neutral overcurrent (51/51N).
- Negative sequence (46IDMT(46DT).
- Open phase (46FA).
- Undervoltage (27).
- Overvoltage (59).

ADVANCED MODEL FUNCTIONS (ADDITIONAL):

- Directionality (67/67N/67NS).
- Directional power (32F/R).
- Synchronism checking (25).
- Overvoltage due to a voltage unbalance (59NC).
- Frequency (81).
- Fuse loss (60FL).
- Voltage unbalance (47).
- Overvoltage due to a voltage unbalance (59NC).
- Recloser (79). Blocking of recloser due to high current.
- Cold load pickup.
- Circuit breaker failure (50BF).
- Circuit breaker monitoring (74TC/CC).
- Sectionalizer.

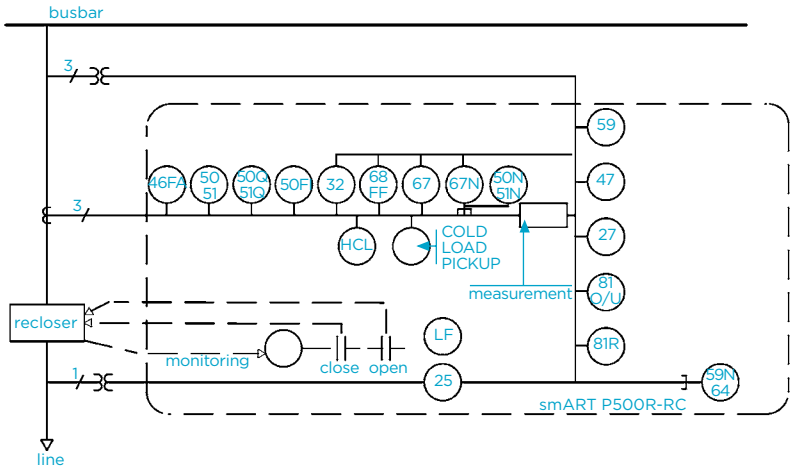

14. CONNECTIONS

Y-Y Connection

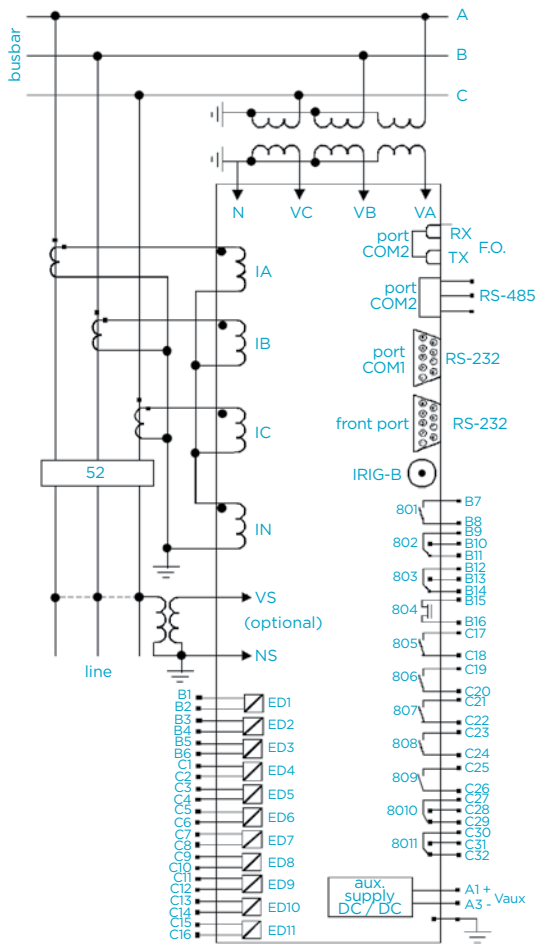

Open delta connection

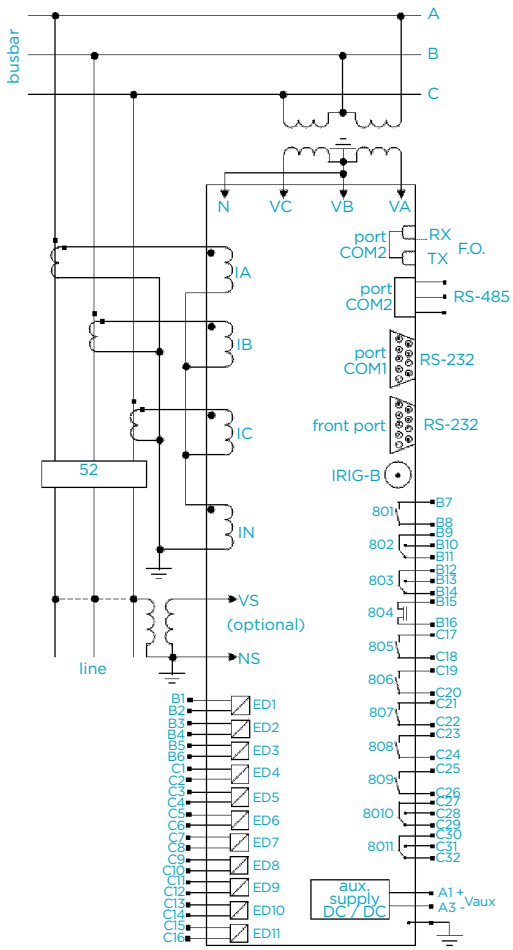

Rear View: connections diagram

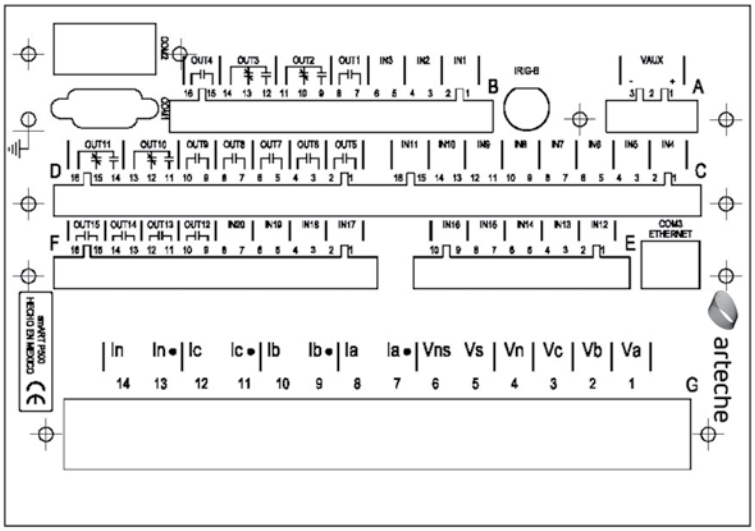

15. DIMENSIONS

Vertical model

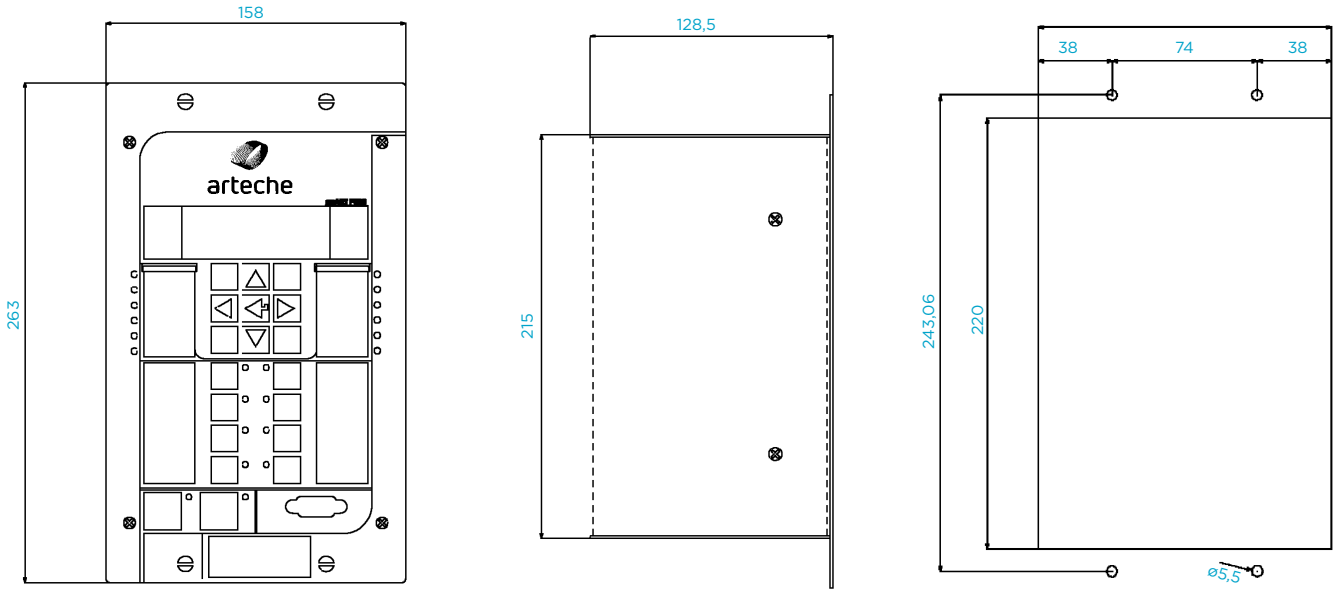

External dimensions (mm)

Panel drilling (mm)

16. proART® SOFTWARE

The proART® software from ARTECHE allows for communication between a computer and the smART P500R protections family. It is a multi-language Windows application compatible with the following operating systems: Windows 2000, Windows XP, Windows Vista and Windows 7 and makes efficient use of object oriented programming, achieving harmonic and scalable design.

In addition, it has an open data structure that allows for its maintenance and the incorporation of new functions.

With the proART® software, visual interaction between the PC user and smART P500R protections in a friendly environment, allowing for their configuration in an easy and intuitive manner, ensuring their adequate performance and minimizing programming errors. It has online help in all its windows and integrates the protection User Manual.

LOGIC FUNCTIONS

The proART® software contains a graphic editor with configurable and logic functions. It is a powerful and highly-flexible tool that makes it possible to implement a wide variety of protection and control functions, including the use of analog signal comparators.

It makes the replacement and/or redundancy of external interlocks and control schemes possible, which were traditionally done through the use of auxiliary relays and wired logics.

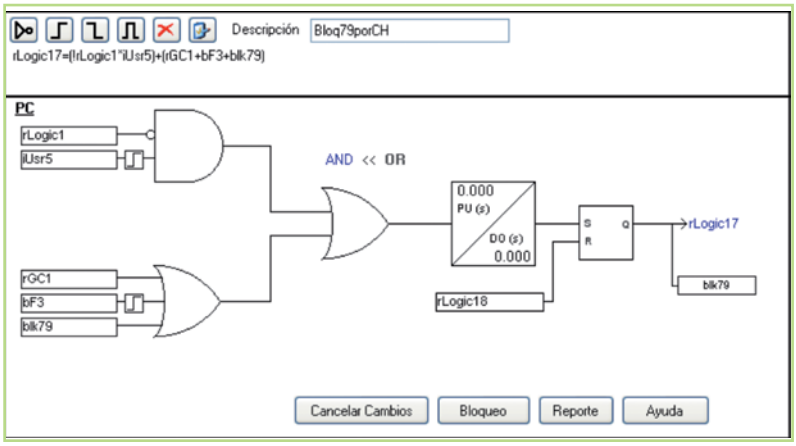

17. SETTING RANGES

STANDARD PROTECTION FUNCTIONS

ANSI/IEEE Code	Function	Setting ranges	Increment	Accuracy
	Synchronism checking			
25	Reference phase	A/B/C Phase		
	Undervoltage permission			
	Dead line dead bus	NO/YES		
	Dead line live bus	NO/YES		
	Live line dead bus	NO/YES		
	Live minimum voltage	0 to 10 V (Vn= 6.5 V) 10 to 300 V (Vn= 115 V)	0,01 V	20 mV or ±0,5%
	Bus minimum voltage	0 to 10 V (Vn= 6.5 V) 10 to 300 V (Vn= 115 V)	0,01 V	20 mV or ±0,5%
	Synchronism permission			
	Minimum time	0 to 100 s	1 s	±1/2 cycle
	Magnitude difference	0 to 10 V (Vn = 6.5 V) 10 to 300 V (Vn = 115 V)	0,01 V	30 mV or ±0,5%
	Angle difference	0º to 90º	0,1°	±0,3°
	Frequency difference	0 to 5 Hz	0,01 Hz	±0,03 Hz

ANSI/IEEE Code	Function	Setting ranges	Increment	Accuracy
	Undervoltage (4 levels)			
27	Pick-up	0 to 12 V (Vn= 6,5 V) 0 to 300 V (Vn= 115 V)	0,01 V	10 mA to ±0,5%
	Definite time	0 to 60 s	0,01 s	±1 cycle

ANSI/IEEE Code	Function	Setting ranges	Increment	Accuracy
	Directional power			
32	Pick-up	-400 to -0,1 W 0,1 to 400 W (In=1 A, Vn=6,5 V) -3000 to -1 W 1 to 3000 W (In=5 A, Vn=115 V)	0,1 W	±1 W
	Additional time	0 a 600 s	0,01 s	±1/2 cycle

ANSI/IEEE Code	Function	Setting ranges	Increment	Accuracy
	Negative sequence overcurrent			
48 DT 46 IDMT	**Instantaneous overcurrent negative sequence**			
	I_2 Pick-up	0,02 to 20 A (In= 1 A) 0,1 to 100 A (In= 5 A)	0,001 A	10 mA or ±0,5% 50 mA or ±0,5%
	Definite time	0 to 60 s	0,01 s	±1/2 cycle
	Negative sequence timed overcurrent			
	I_2 Pick-up	0,02 to 20 A (In= 1 A) 0,1 to 100 A (In= 5 A)	0,001 A	10 mA or ±0,5% 50 mA or ±0,5%
	Curve	*See function 51		

ANSI/IEEE Code	Function	Setting ranges	Increment	Accuracy
	Open phase			
46 FA	Pick-up	0,1 to 0,5 (p.u. of I_2/I_1)	0,01 (p.u. of I_2/I_1)	±0,5%
	Definite time	0,05 to 300 s	0,01 s	±1/2 cycle

ANSI/IEEE Code	Function	Setting ranges	Increment	Accuracy
	Voltage unbalance			
47	**Voltage unbalance**			
	Pick-up	0,1 to 0,5 (% of V_2/V_1)	0,01 V (% of V_2/V_1)	±0,5%
	Definite time	0 to 60 s	0,01 s	±1/2 cycle
	Inverse sequence			
	Definite time	0 to 60 s	0,01 s	±1/2 cycle

ANSI/IEEE Code	Function	Setting ranges	Increment	Accuracy
	High/Low instantaneous overcurrent			
50	Phase/Neutral pick-up	0,02 to 20 A (In= 1 A) 0,1 to 100 A (In= 5 A)	0,001 A	10 mA or ±0,5% 50 mA or ±0,5%
	Sensitive neutral pick-up	0,005 to 10 A (In= 1 A) 0,02 to 20 A (In= 5 A)	0,001 A	1 mA o ±0,5 %
	Definite time	0 to 60 s	0,01 s	±1/2 cycle

ANSI/IEEE Code	Function	Setting ranges	Increment	Accuracy
	Circuit breaker failure			
50 BF	Phase drop-out	0,02 to 20 A (In= 1 A) 0,1 to 100 A (In= 5 A)	0,001 A	10 mA or ±0,5% 50 mA or ±0,5%
	Neutral drop-out	0,005 to 10 A (In= 1 A) 0,02 to 20 A (In= 5 A)	0,001 A	10 mA or ±0,5% 50 mA or ±0,5%
	Definite time for opening	0 to 60 s	0,01 s	±1/2 cycle

ANSI/IEEE Code	Function	Setting ranges	Increment	Accuracy
	Timed overcurrent			
51	Phase/Neutral pick-up	0,02 to 20 A (In= 1 A) 0,1 to 100 A (In= 5 A)	0,001 A	10 mA or ±0,5% 50 mA or ±0,5%
	Sensitive neutral pick-up	0,005 to 10 A (In= 1 A) 0,02 to 20 A (In= 5 A)	0,001 A	1 mA or ±0,5%
	Curve	EC/ANSI/Curve US/ RECLOSER/ Others/USER 1/USER 2/ USER 3/USER 4/Definite time		

ANSI/IEEE Code	Function	Setting ranges	Increment	Accuracy
	Overvoltage (4 levels)			
59	Pick-up	0 to 12 V (Vn= 6,5 V) 0 to 300 V (Vn= 115 V)	0,001 V	20 mV or ±0,5%
	Definite time	0 to 60 s	0,01 s	±1/2 cycle

ANSI/IEEE Code	Function	Setting ranges	Increment	Accuracy
	Neutral overvoltage			
59 N	Pick-up	0 to 12 V (Vn= 6,5 V) 0 to 300 V (Vn= 115 V)	0,001 V	20 mV or ±0,5%
	Definite time	0 to 60 s	0,1 s	±1/2 cycle

ANSI/IEEE Code	Function	Setting ranges	Increment	Accuracy
	Directionality			
67 67 N	Direction	Forward / Backward / Bidirectional		
	Polarization for neutral faults	Zero sequence voltage Negative sequence voltage		
	Polarization for faults between phases	Fault voltage Positive sequence voltage Negative sequence voltage Voltage in quadrature		
	Polarization for earth faults	Zero sequence voltage Negative sequence voltage Voltage in quadrature		
	Maximum angle sensitivity earth faults	0 to 90°	0,01°	±0,3°
	Maximum angle sensitivity between phases	0 to 90°	0,01°	±0,3°
	Capacitive series compensation	NO/YES		
	Minimum polarization voltage	2 to 10	0,1	

ANSI/IEEE Code	Function	Setting ranges	Increment	Accuracy
	Circuit breaker monitoring			
74 TC/CC	Excessive number of trips	1 to 254	1	
	Time window for no. of trips	300 to 3600	1	±1/2 cycle
	Alarm threshold	0 to 65535	1	±0,5%
	Calculation type	KI, KI2, KI2T		

ANSI/IEEE Code	Function	Setting ranges	Increment	Accuracy
	Recloser			
	Generals			
	In service	NO/YES		
	Sequence coordination	NO/YES		
	Number of reclosers	1 to 4	1	
	Safety time after automatic closing (trips between phases)	1 to 600 s	1 s	±1/2 cycle
	Safety time after automatic closing (ground trips)	1 to 600 s	1 s	±1/2 cycle
	Safety time after manual closing	1 to 600 s	1 s	±1/2 cycle
	High current lockout (Phase)			
	Pickup	0,02 to 20 A 0,1 to 100 A	0,001 A	10 mA or ±0,5% 50 mA or ±0,5%
	Definite time	0 to 60 s	0,01 s	±1/2 cycle
	Apply after first pickup	NO/YES		
	Apply after closing 1	NO/YES		
79	Apply after closing 2	NO/YES		
	Apply after closing 3	NO/YES		
	High current lockout (Neutral)			
	Pickup	0,02 to 20 A 0,1 to 100 A	0,001 A	10 mA or ±0,5% 50 mA or ±0,5%
	Definite time	0 to 60 s	0,01 s	±1/2 cycle
	Apply after first pickup	NO/YES		
	Apply after closing 1	NO/YES		
	Apply after closing 2	NO/YES		
	Apply after closing 3	NO/YES		
	Reclosing shots			
	Timing			
	Waiting time (fault between phases)	0,1 to 600 s	0,01 s	±1/2 cycle
	Waiting time (earth fault)	0,1 to 600 s	0,01 s	±1/2 cycle
	Trip curves after reclosing (Phases/Neutral/Sensitive Neutral)			
	Curve	*See function 51		

ANSI/IEEE Code	Function	Setting ranges	Increment	Accuracy
	Frequency (8 levels)			
	Pick-up	46 to 65 Hz	0,01 Hz	±0,03 Hz
	Definite time	0,05 to 600 s	0,01 s	±1 cycle
	Hysteresis	0 to 1 Hz	0,1 Hz	
	Frequency rate of change			
81	Maximum frequency supervision	40 to 70 Hz	0,01 Hz	0,03 Hz
	Minimum current supervision	0 to 100 A	0,1 A	10 mA or ±0,5%
	Pick-up value	0,2 to 5 (Hz/s)	0,05 Hz/s	0,05 Hz/s ±5%
	Additional time	0 to 2 s	0,01 s	±1 cycle
	Pick-up cycles number	3 to 15 cycles	1 cycle	

All the protection functions that use inverse time elements have the following types of curves:

Type	Family	Increment	Accuracy
IEC Curve			
Family of curves	Normal inverse • Highly inverse • Extremely inverse • Short inverse • Long inverse • Special extremely inverse		
Index	0,05 to 1,09	0,01	
Adder	0,00 to 100	0,01	
Electromechanical reset	NO/YES		
ANSI Curve			
Family of curves	Normal inverse • Highly inverse • Extremely inverse • Moderately inverse		
Index	0,5 to 30	0,01	
Adder	0,00 to 100	0,01	
Electromechanical reset	NO/YES		
US Curve			
Family of curves	U1. Moderately inverse • U2. Inverse • U3. Highly inverse • U4. Extremely inverse • U5. Short term inverse		
Index	0,5 to 15	0,01	
Adder	0,00 to 100	0,01	
Electromechanical reset	NO/YES		
Recloser Curve			
Feature	Recloser cont.		
	R/RV/RX Type		
Family of curves	Recloser Control: 101; 102; 103; 104; 105; 106; 107; 111; 112; 113; 114; 115; 116; 117; 118; 119; 120; 121; 122; 131; 132; 133; 134; 135; 136; 137; 138 ; 139; 140; 141; 142; 151; 152; 161; 162; 163; 164; 165; 200; 201; 202		
	R/RV/RX Type: 25 Amp (A,B,C,D,E); 35 Amp (A,B,C,D,E); 50 Amp(A,B,C,D,E); 70 Amp (A,B,C,D,E); 100 Amp (A,B,C,D,E); 140 Amp (A,B,C,D,E); 160 Amp (A,B,C,D,E); 185 Amp (A,B C,D,E); 225 Amp (A,B,C,D,E); 280 Amp (A,B, C,D,E); 280X Amp (A, B,C,D, E); 400 Amp (A,B,C,D,E); 400X Amp (A,B, C,D,E); 560 Amp (A,B,C,D,E); 560X Amp (A,B,C,D,E)		
Index	0,5 to 30	0,01	
Adder	0,00 to 100	0,01	
IEEE			
Family of curves	Highly inverse • Extremely inverse • Moderately inverse		
Index	0,5 to 15	0,01	
Adder	0,00 to 100	0,01	
Electromechanical reset	NO/YES		
Definite time			
Definite time	0 to 600 s	0,01 s	±1/2 cycle

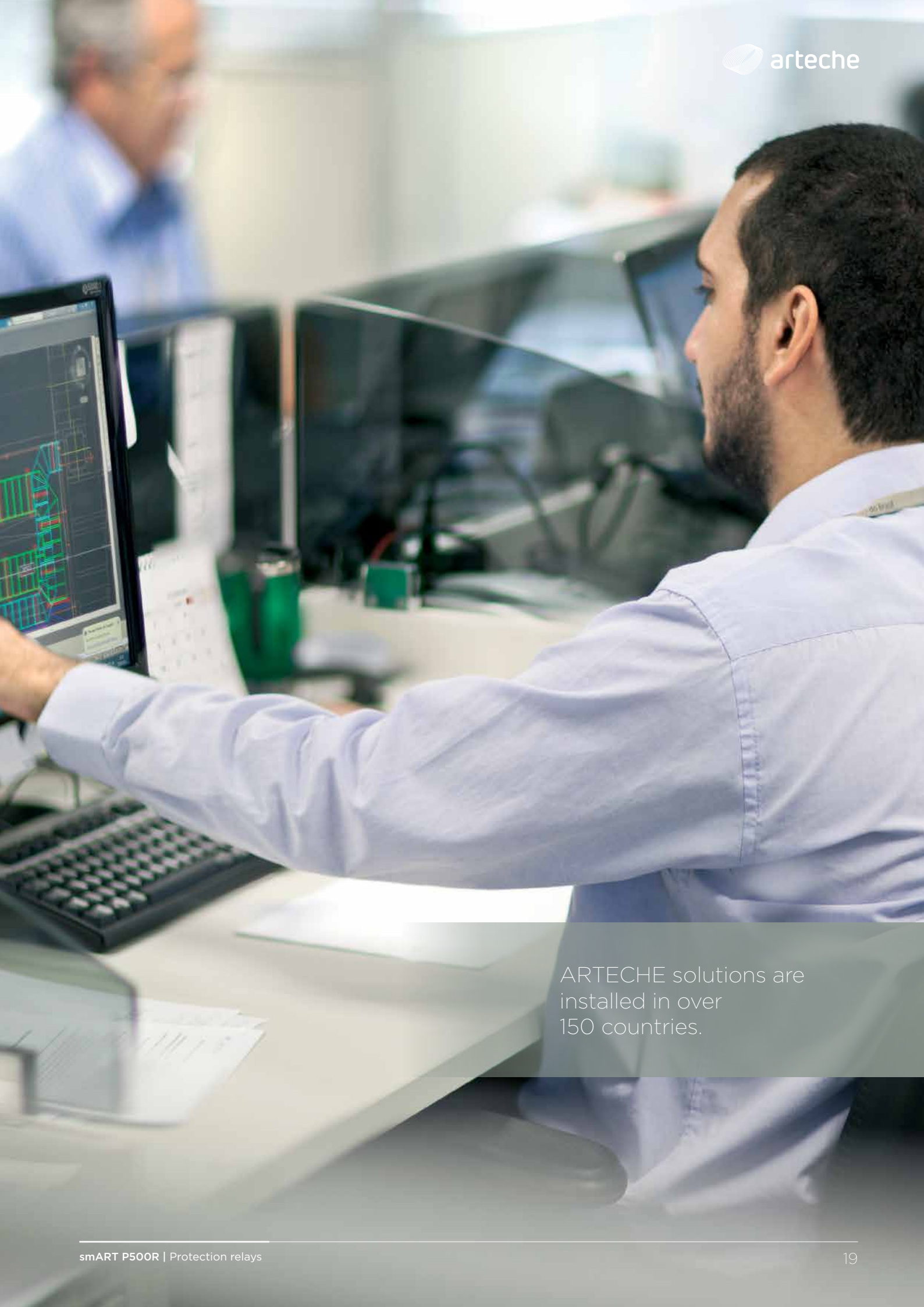

ARTECHE solutions are installed in over 150 countries.

18. TECHNICAL SPECIFICATIONS

INPUT VOLTAGE

Vac: VL-N: 6,5 Vac (burden <0,001 VA)
VL-N: 120 Vac (burden <0,1 VA)

Vdc (Auxiliary): 24/48 Vdc. Range: 18-60 Vdc
125/250 Vdc. Range: 81-250 Vdc

INPUT CURRENT

I nominal phase: 1 A / 5 A
I range phase: 16 mA-20 A / 40 mA-100 A
I continuous phase: 20 A / 100 A
I short time phase: 100 A (1 s) / 500 A (1 s)
I nominal sensitive neutral: 5 mA-10 A / 30 mA-50 A
I continuous sensitive neutral: 10 A / 50 A
I nominal sensitive short time: 50 A (1 s) / 250 A (1 s)

DIGITAL INPUTS

Vdc: 60 Vdc, option: 86 - 250 Vdc

OUTPUTS

Output relays (8 Type A and 2 Type C)

Output voltage: 240 Vac / 250 Vdc
Breaking capacity: (L/R= 40 ms)
220 Vdc: 0,2 A - 50 VA
125 Vdc: 0,3 A - 37,5 VA
48 Vdc: 1,25 A - 60 VA
24 Vdc: 2,5 A - 60 VA
VoutMake: 30 A - 0,2 s
Carry: 10 A continuous
Pickup time: <8 ms
Dropout time: <5 ms
Opto-insulated output, solid state type A: 0,030 A @ 120 Vac

Operating frequency: 50 / 60 Hz

OPERATING ENVIRONMENT

Temperature: -25°C to +55°C
RH Humidity: Up to 95% without condensation
Storage temperature: -40° to 70°C
IP Protection Degree: IP40
Cabinet: 5U height and 1/3 19" rack
Accuracy: 0,5% measurement - 3% protection

COMMUNICATION PORTS

Front: RS 232
Rear: RS 232 / RS 485 or Fiber optic

Ethernet via RJ45 cable (optional)
Interface: Insulated 600 Ω transformer
Insulation: 500 V
Connector: RJ45 (female)
Communication speed: 10/100 Mb
Type of cable: Shielded
Length of cable: 100 m maximum

Time synchronization port: IRIG - B (b000)
Input: Demodulated
Input level: TTL
Insulation: 500 V

PROTOCOLS

Front and rear port:
Arteche ArtCom® proprietary
DNP 3.0 Level 2 slave
Modbus RTU
IEC 60870-5-101
Harris 5000
PROCOME

Ethernet: DNP 3.0 TCP/IP y UDP/IP
Modbus TCP/IP
IEC 60870-5-104

Display: LCD 20 x 4 with adjustable contrast
LEDs: 12 programmable
Keyboard: 19 buttons
Fixed keys: Trip/Open, Close, ESC, Settings, Meas, Reset, Enter, and arrow buttons (Up, Down, Left, Right)
Programmable keys: F1 to F6
Setting ranges: 6

TESTS

ELECTROMAGNETIC COMPATIBILITY AND INSULATION

› Radioelectric emission measures conducted via DC supply terminals.	IEC 60255-25 (2000), EN 55022 (1998) + A1 (2000)+A2 (2003)
› Radiated radioelectric emissions measured.	IEC 60255-25 (2000), EN 55022 (1998) + A1 (2000)+A2 (2003)
› Immunity test for electrostatic discharges. ±8 kV Levels in contact mode and ±15 kV in air mode.	IEC 61000-4-2 (1995)+A1 (1998) + A2 (2000), IEC 60255-22-2 (1996)
› Immunity test for radiofrequency interferences. Range of frequencies from 80–1000 MHz with 10 V/m levels and from 1400–3000 MHz with 3 V/m levels modulated by 10 V/m pulses.	IEC 61000-4-3 (2006)
› Immunity test for rapid radiofrequency bursts.	
› Immunity test for radiofrequency induced signals.	IEC 61000-4-4 (2004)
› Immunity test for surges. ±4 kV levels in common mode and ±2 kV in differential mode.	IEC 61000-4-6 (1996)+A1 (2000) IEC 61000-4-5 (1995)+A1 (2000)
› Immunity test for interruptions, gaps, and variations in DC supply.	
› Immunity test for ripple in DC supply.	IEC 61000-4-29 (2000)
› Immunity test for to 60 Hz magnetic fields.	IEC 61000-4-17 (2002)
› Immunity test damped oscillatory magnetic fields.	IEC 61000-4-8 (2001)
› Immunity test for damped oscillatory magnetic fields.	IEC 61000- 4-10 (2001)
› Immunity test for to 1 MHz damped waves.	IEC 61000-4-12 (1995)
› Dielectric strength measures.	IEC 60255-22-1 (2005)
› Insulation strength measures.	IEC 60255-5 (2000)
› Voltage impulse test.	IEC 60255-5 (2000) IEC 60255-5 (2000)

ENVIRONMENTAL TESTS

› Dry heat test (operating mode at 55°C).	IEC 60068-2-2 (1974) + A (1976) + A1 (1993) + A2 (1994)
› Cold test (operating mode at -25°C).	IEC 60068-2-1 (1990) + A1 (1993) + A2 (1994)
› Dry heat test (storage mode at 70°C).	EC 60068-2-2 (1974) + A (1976) + A1 (1993) + A2 (1994)
› Cyclic humid heat test (12+12 hour cycle).	IEC 60068-2-30 (2005)
› Cold test (storage mode at -40°C)	IEC 60068-2-1 (1990) + A1 (1993) + A2 (1994)

MECHANICAL TESTS

› Vibration test.	IEC 60255-21-1-1988. Class II
› Shock response test, shock resistance test, and bump tests.	IEC 60255-21-2-1988. Class II
› IP 40 protection grade test.	IEC 60529/89 + A1/99

19. MODEL SELECTION

smART P500R	Model	Current	Voltage	Exp.	Comm.	Comm.	Power supply	Box	Lang.	FW	
Model selection ▶▶											
Model											
Line	AL										
Recloser	RC										
Capacitor banks	BC										
Current inputs											
3x5 A, 1x5 A		0									
3x5 A, 1x1 A		1									
3x5 A, 1xSensitive neutral		2									
3x1 A, 1x1 A		3									
3x1 A, 1xSensitive neutral		4									
3x5 A, 1xSensitive neutral (10 mA)		5									
3x1 A, 1xSensitive neutral (50 mA)		6									
Others (to be defined)		X									
Voltage inputs											
4x115 Vac			0								
4x6,5 Vac			1								
3x6,5 Vac + 1x115 Vac(Vs)			2								
Others (to be defined)			X								
Expansion I/O Ethernet											
11I + 11O				1							
12I + 8O + Ethernet				2							
20I + 15O + Ethernet				3							
Rear comm. ports											
1xRS-232 + 1xRS-485					1						
1xRS-232 + 1xFOC (glass)					2						
Front comm. ports											
USB + RS232						U					
Power supply											
24/48 Vdc							0				
110/220 Vdc-Vac							1				
Box type											
Vertical								V			
Language											
Spanish									S		
English									E		
Portuguese									P		
French									F		
FW Version											
Last available version										X	X
Copel										A	X
Celesc										C	X
CFE										D	X

ACCESORIES

- Bluetooth communications module
- UM 500 module
- FO-RS232 converter module
- 24V mono recloser card controller
- 24V IBD mono recloser card controller
- 125V mono recloser card controller
- 120V IBD mono recloser card controller
- 24V triphasic recloser card controller
- 125V triphasic recloser card controller
- 6,5V recloser card controller
- 24V resin mono recloser car controller
- 24V fast mono recloser card controller
- 120V fast mono recloser card controller

20. QUALITY AND ENVIRONMENT

Everyone in the ARTECHE Group works under the criteria set out in our environmental and quality policy.

A sum of regulated procedures based on communication, teamwork, prevention analysis and continuous improvement, common to the whole organization.

- Advanced sustainability criteria in production and in the creation and development of new products.
- Compact designs, manufactured with minimal energy consumption and enviromental-friendly materials.
- Internal and external skill motivation programs.
- Advanced development of knowledge management.
- Quality agreements with utilities.
- Physico-chemical and electrical laboratories for testing under any International Standard.
- Type test reports issued by KEMA, CESI, LAPEM, RENARDIÈRES, etc.
- Final testing according to specific customer requirements.
- Approvals in more than 100 electricity companies.
- ISO 14001:2004.
- ISO 9001:2008.

21. SERVICE

- ARTECHE's service is based on a close relationship with the customers, reflected in the integrated post-sale assistance plan and structured client opinion system.
- In addition to ensuring rapid response, ARTECHE developed a continuous service improvement plan, which sustains an extensive training program with courses, publications, conferences, etc.
- ARTECHE´s focus on service, with a broad experience leading us to be an active participant in the electrical organizations such as: IEC, IEEE, CIGRE, CIRED, ASINEL, etc.
- ARTECHE has production facilities in four continents (North America, South America, Europe, Asia and Australia) and more than 70 technical/commercial offices. Thus ARTECHE provides effective responses to the requirements of any customer and situation, based on the global knowledge acquired.

Over 70 technical/sales service centers with real knowledge about each customer provide fast and close service.

- Physical and chemical laboratories conduct over 130 tests to certify the quality of raw materials.
- The solutions ARTECHE has developed and expanded have made us an active participant in the most important electrical events and organizations.

arteche
Moving together